CONVERTED INTO PDF BY MANISH

Orthographic Projection

Orthographic Projection – Important terms

Horizontal Plane

A plane parallel to the floor is known as horizontal plane. Orthographic projection of an object on horizontal plane is known as top view (plan).

Vertical plane

One plane conveniently selected out of the planes perpendicular to horizontal plane is known as vertical plane. It is known as front view (elevation).

Auxiliary vertical plane

A plane perpendicular to both horizontal plane and vertical plane both is known as auxiliary vertical plane. Orthographic projection on A.V.P. is known as end view or side view.

- Projection

  If straight lines are drawn from various points on the contour of an object to meet a plane, object is said to projected at that plane the figure formed by joining in correct sequence the points at which the lines meet the plane is called a projection of the object.

- Projectors

  The lines from the object to the plane are called as the projectors

- Plane of projection

  The plane on which the projectors meet is known as the plane of projection

- Orthographic projection

  When the projectors are parallel to each other and also perpendicular to the projection plane, the projection is called orthographic projection.

Orthographic Projection (Top View)

- Horizontal Plane
- A plane parallel to the floor is known as horizontal plane. Orthographic projection of an object on horizontal plane is known as top view (plan).

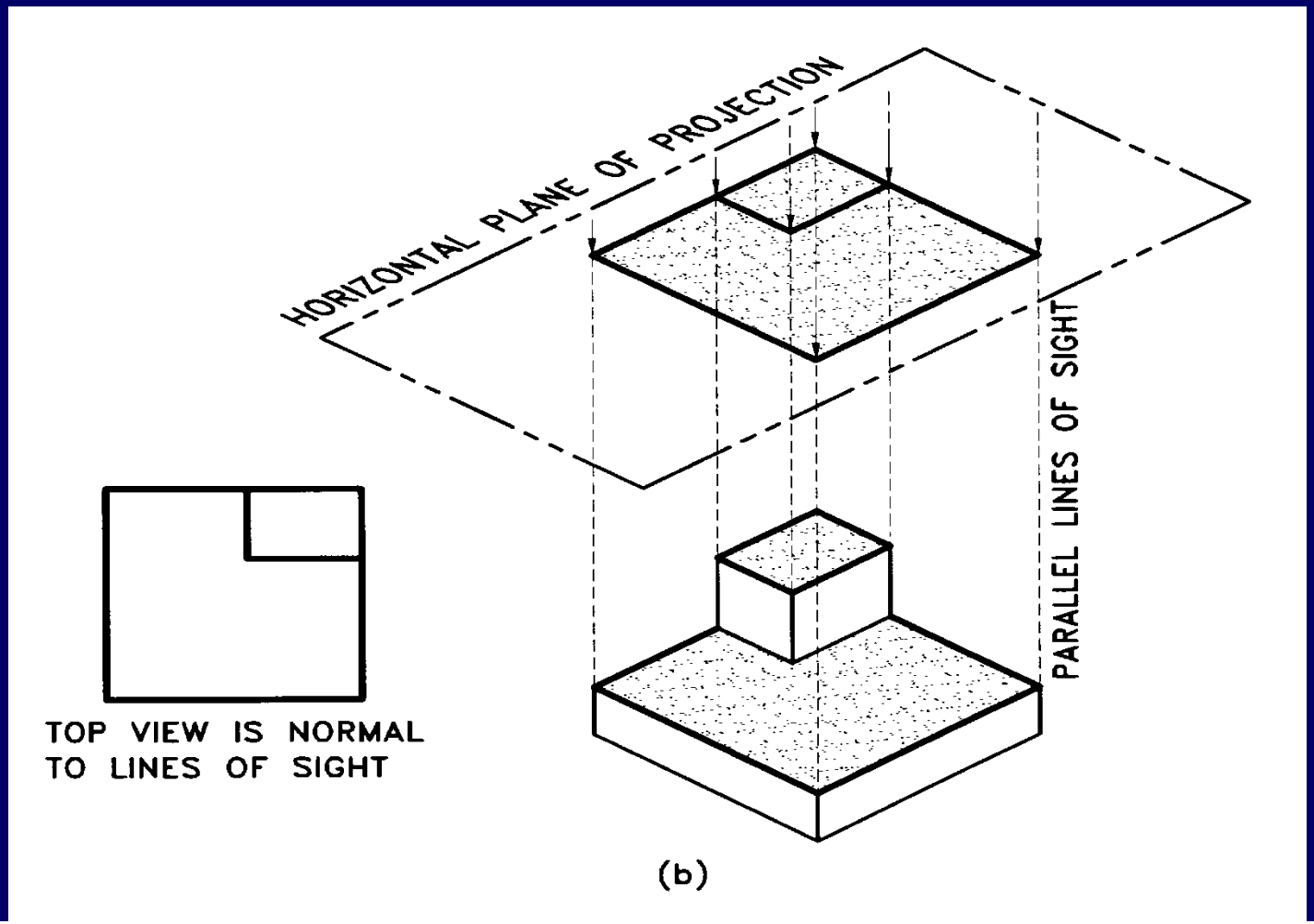

Orthographic Projection (Front View)

- Vertical plane

  One plane conveniently selected out of the planes perpendicular to horizontal plane is known as vertical plane. It is known as front view (elevation).

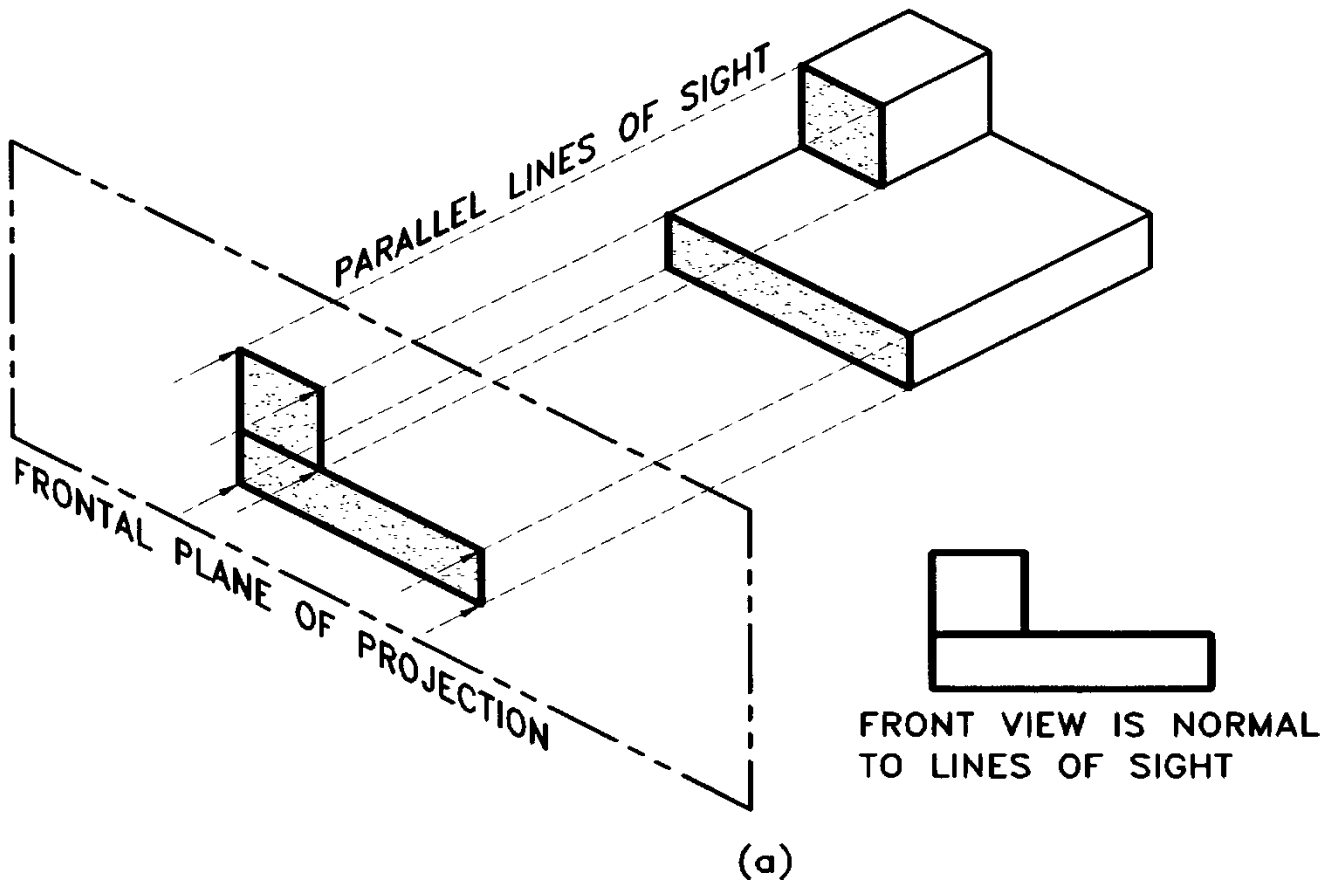

Orthographic Projection (Right Side View)

- Auxiliary vertical plane

  A plane perpendicular to horizontal plane and vertical plane both is known as auxiliary vertical plane. Orthographic projection on A.V.P. is known as end view or side view.

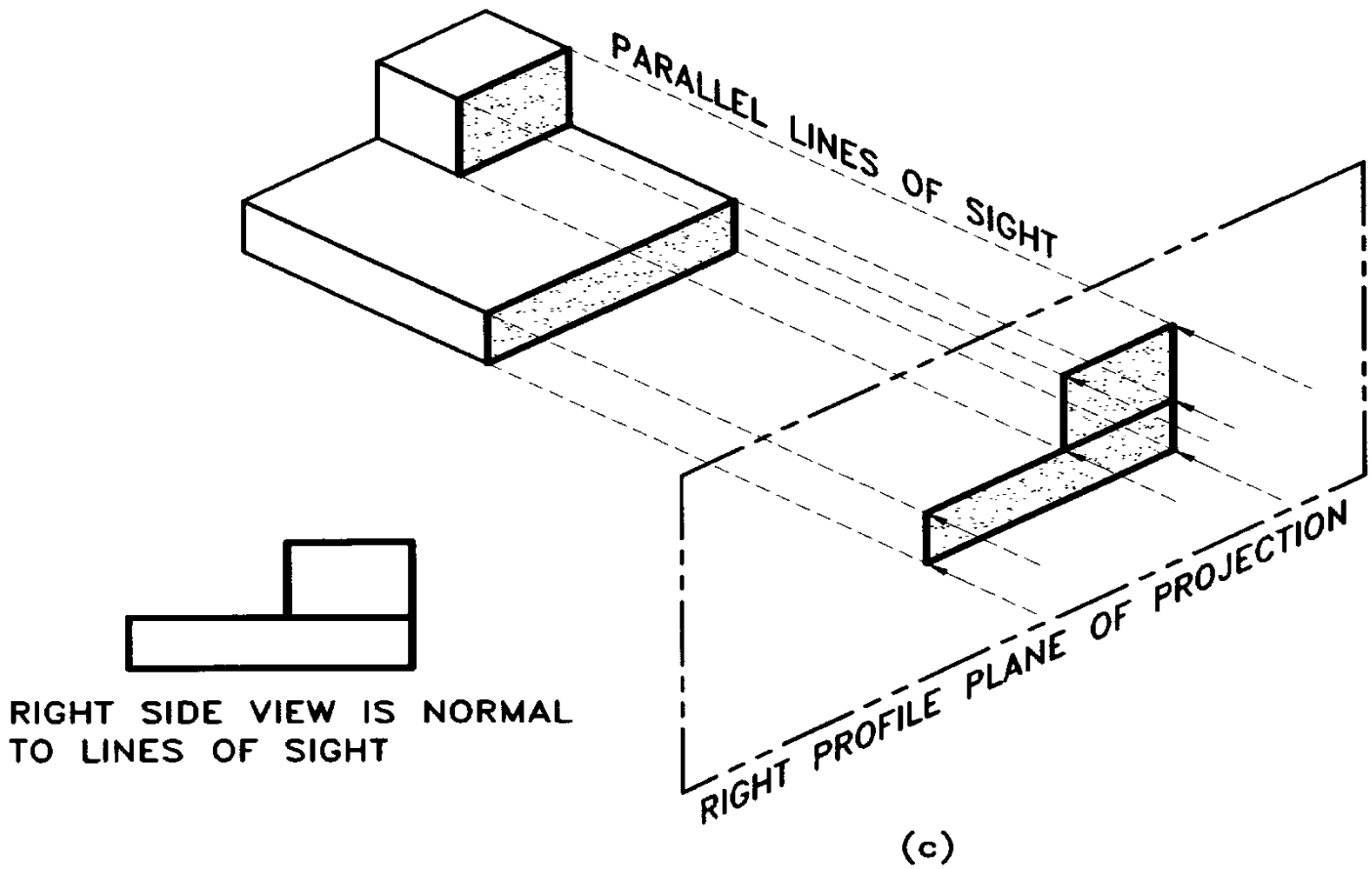

Conti…….

- Parallel edges of the object are shown by parallel lines.
- Right angle remains as it is.
- Semi circle also remains as such.
- Each view show only two dimensions of the object.

Difference between First angle projection and Third angle projection

No.	First angle projection	Third angle projection
1	The object is kept in the first quadrant.	The object is assumed to be kept in the third quadrant.
2	The object lies between the observer and the plane of projection.	The plane of projection lies between the observer and the object.
3	The plane of projection is assumed to be non-transparent.	The plane of projection is assumed to be transparent.
4	Plan comes below the elevation and left side view is drawn to the right of elevation.	Plan comes above the elevation and left side view is drawn to the left side of the elevation
5	This method of projection is now recommended in India	This method is used in USA and other countries.

Symbols for 1st & 3rd Angle Projection

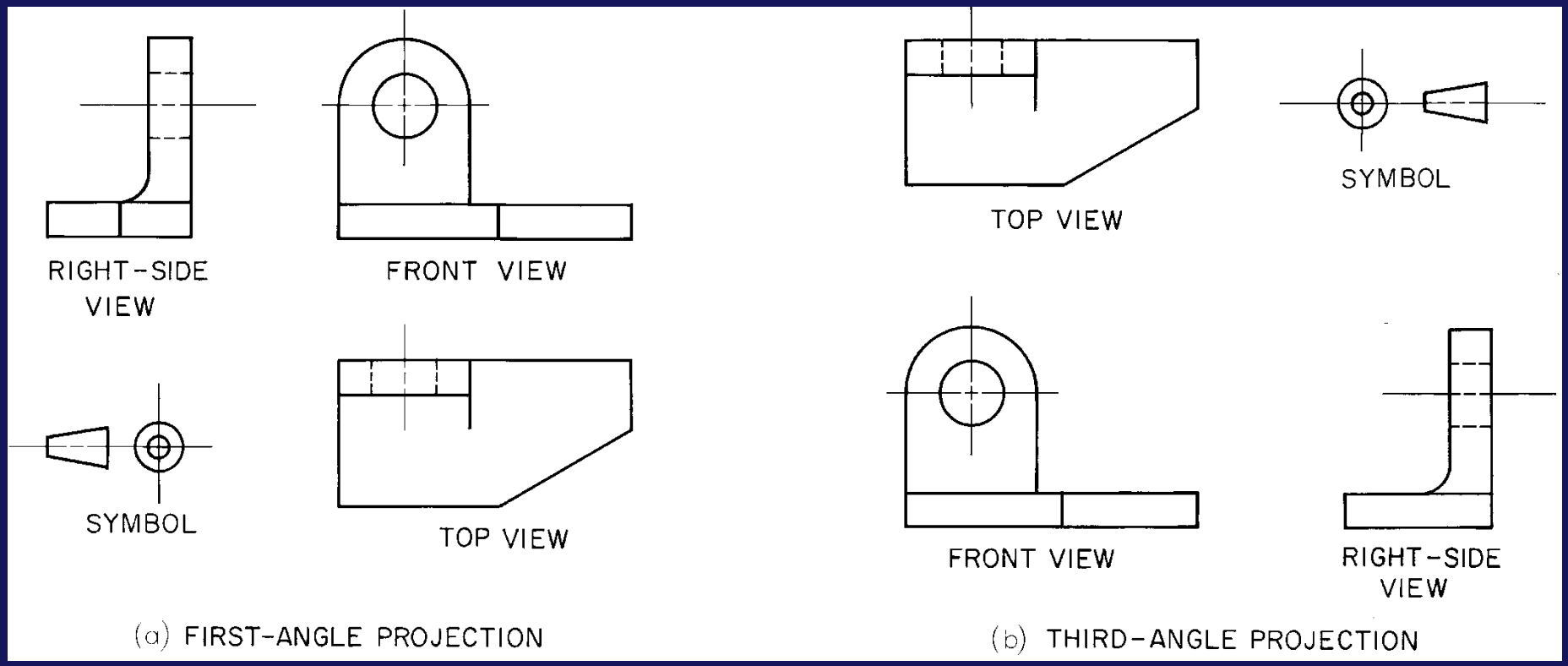

MULTIVIEW PROJECTION

Three principle dimensions of an object …

Each view will represented only two dimension .

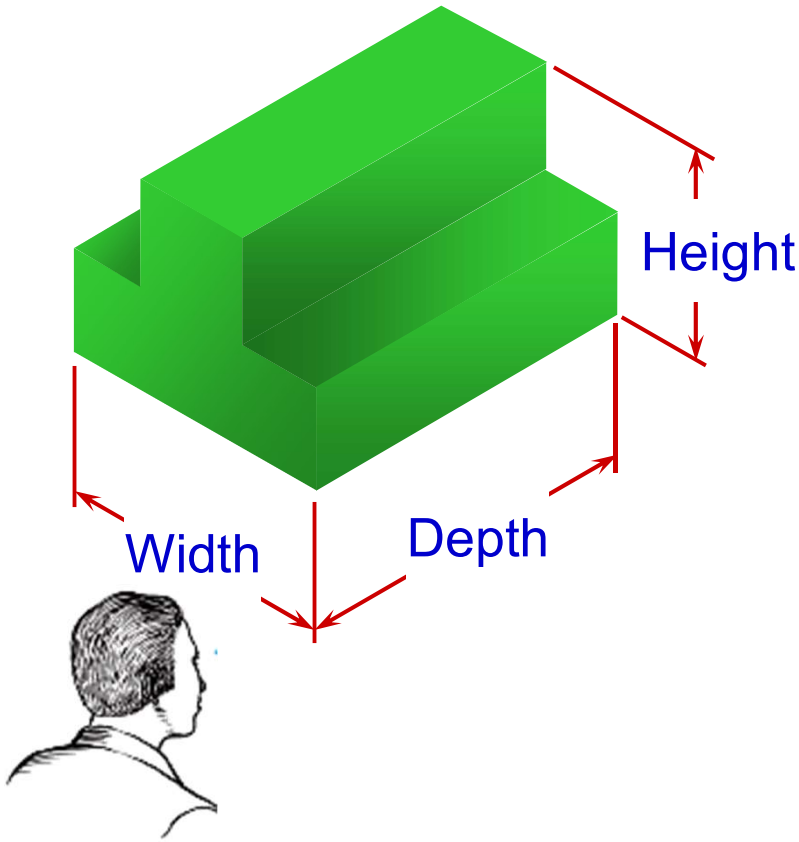

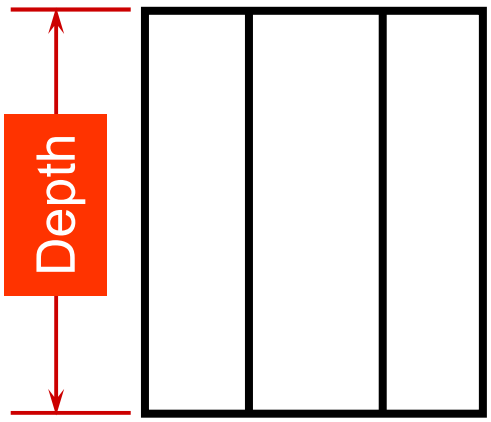

Adjacent view(s) is needed to fulfill the size description.

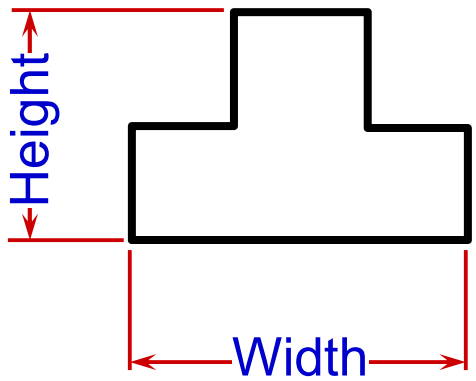

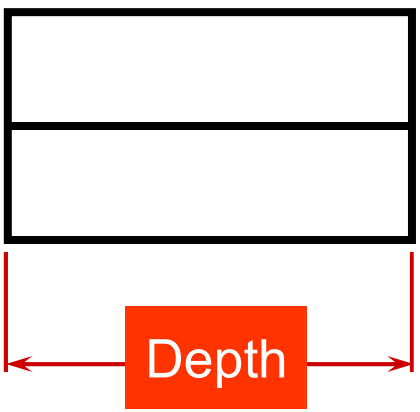

TO OBTAIN MULTIVIEW
REVOLVE THE OBJECT

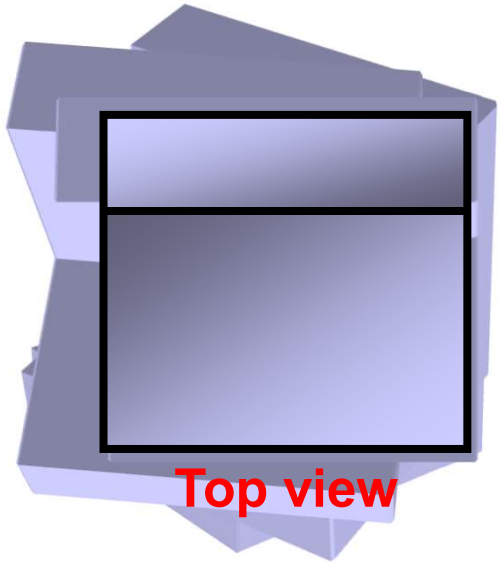

Top view

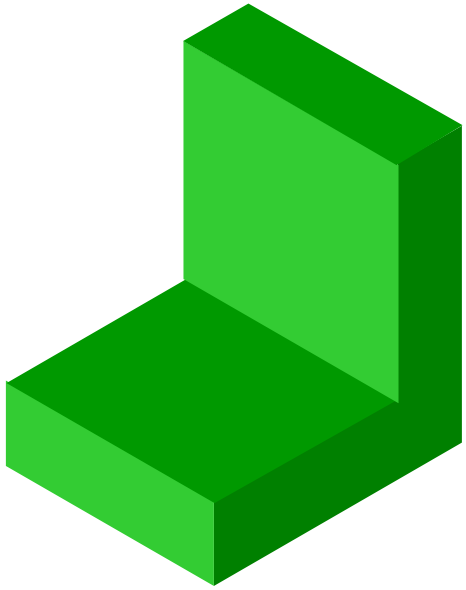

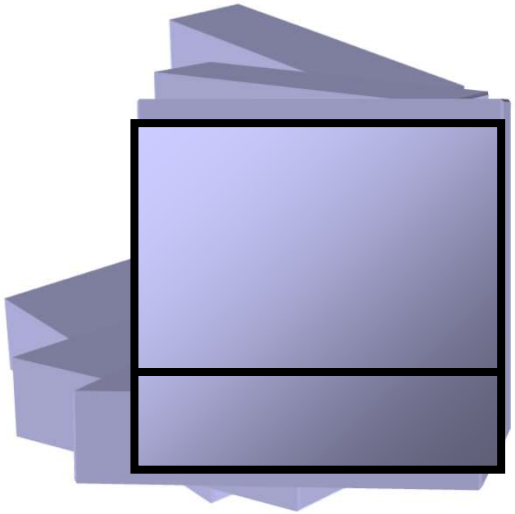

Front view

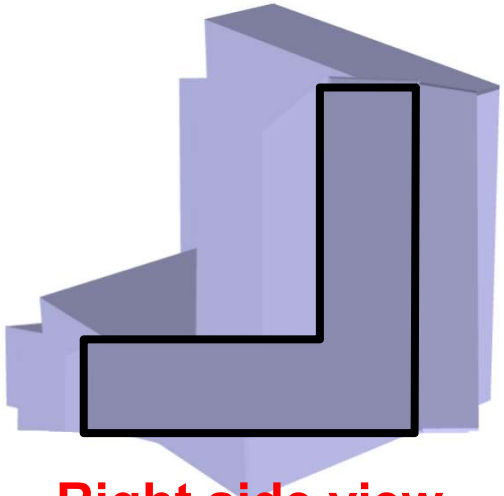

Right side view

OBSERVER MOVE AROUND

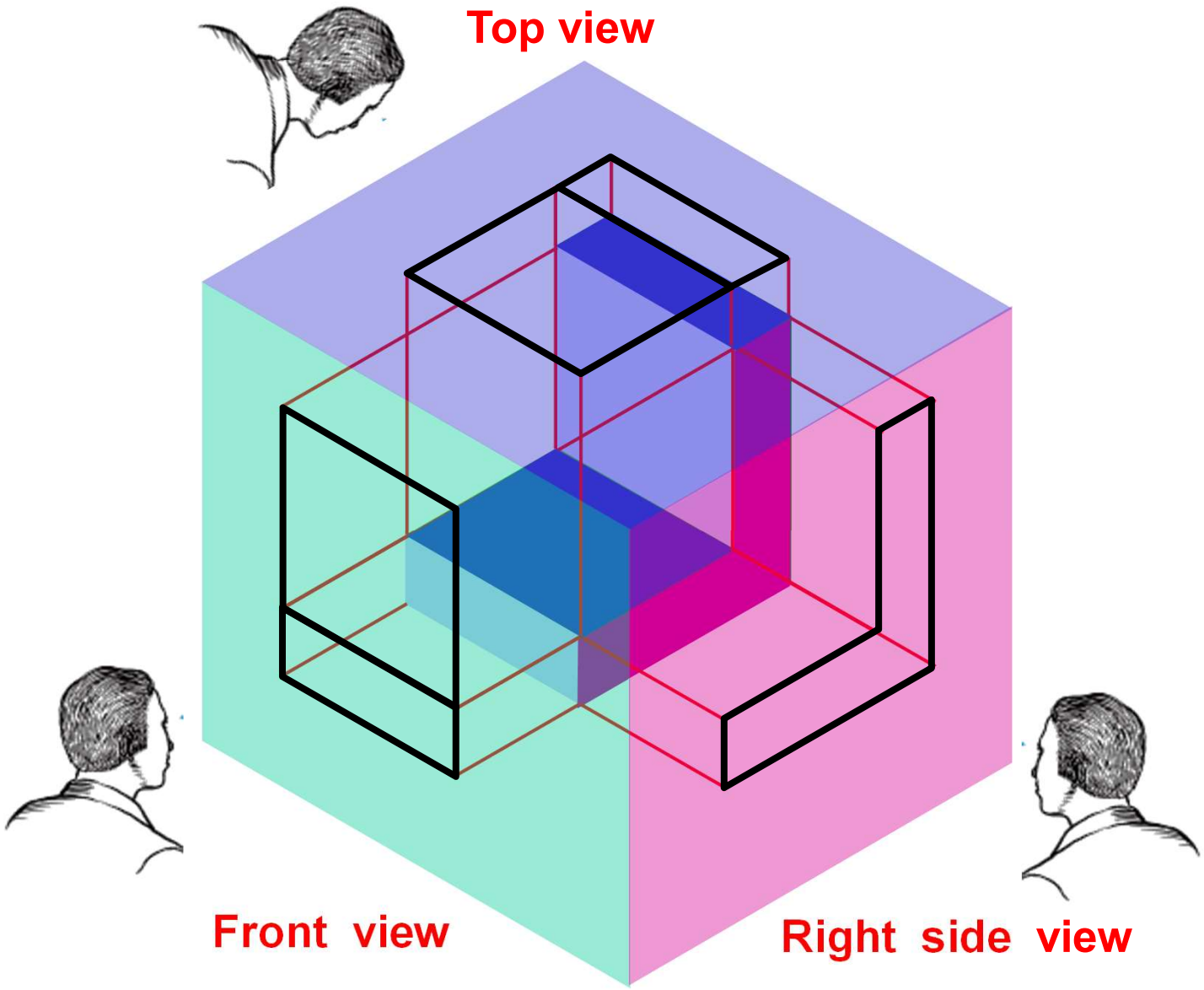

THE GLASS BOX CONCEPT

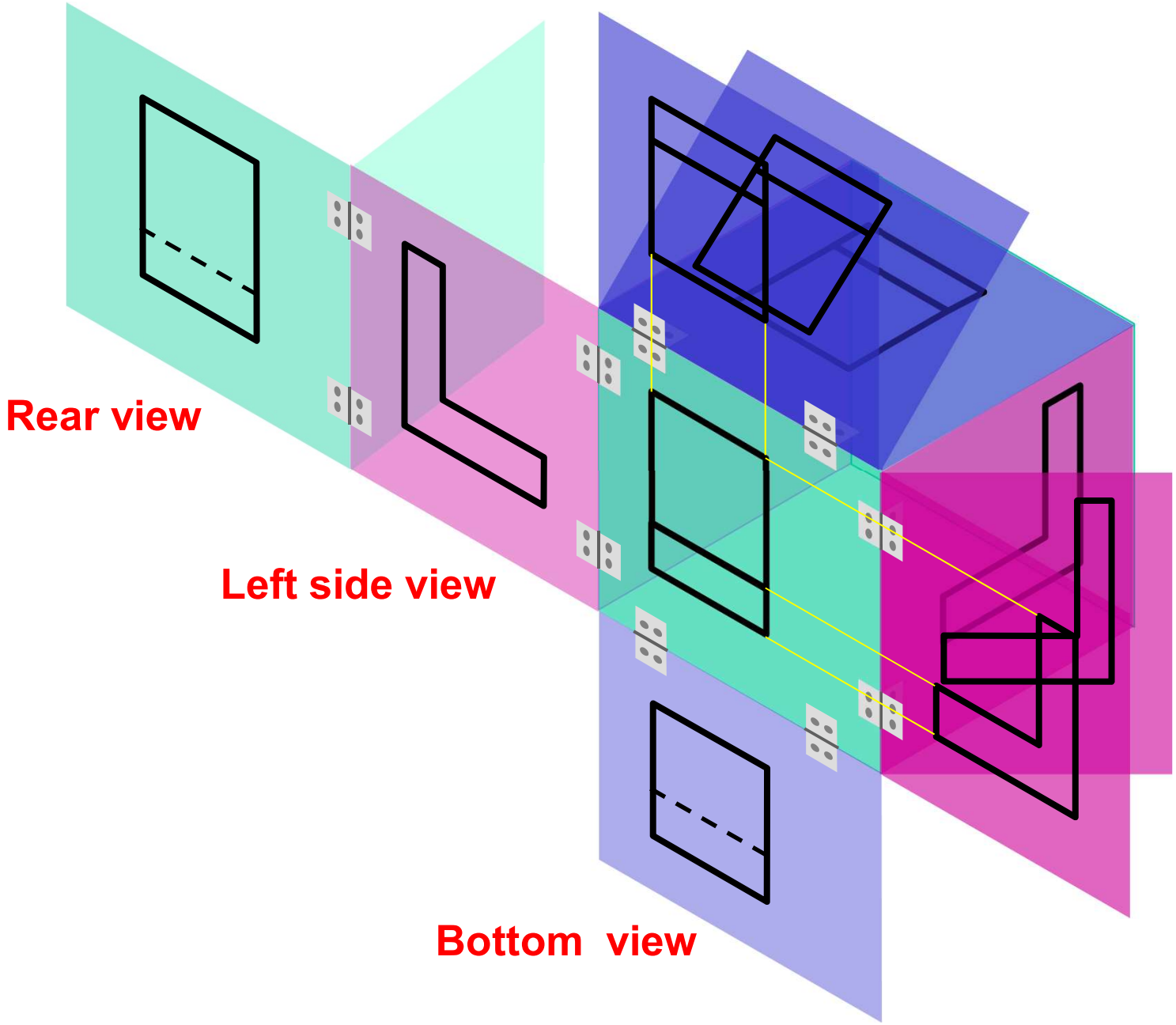

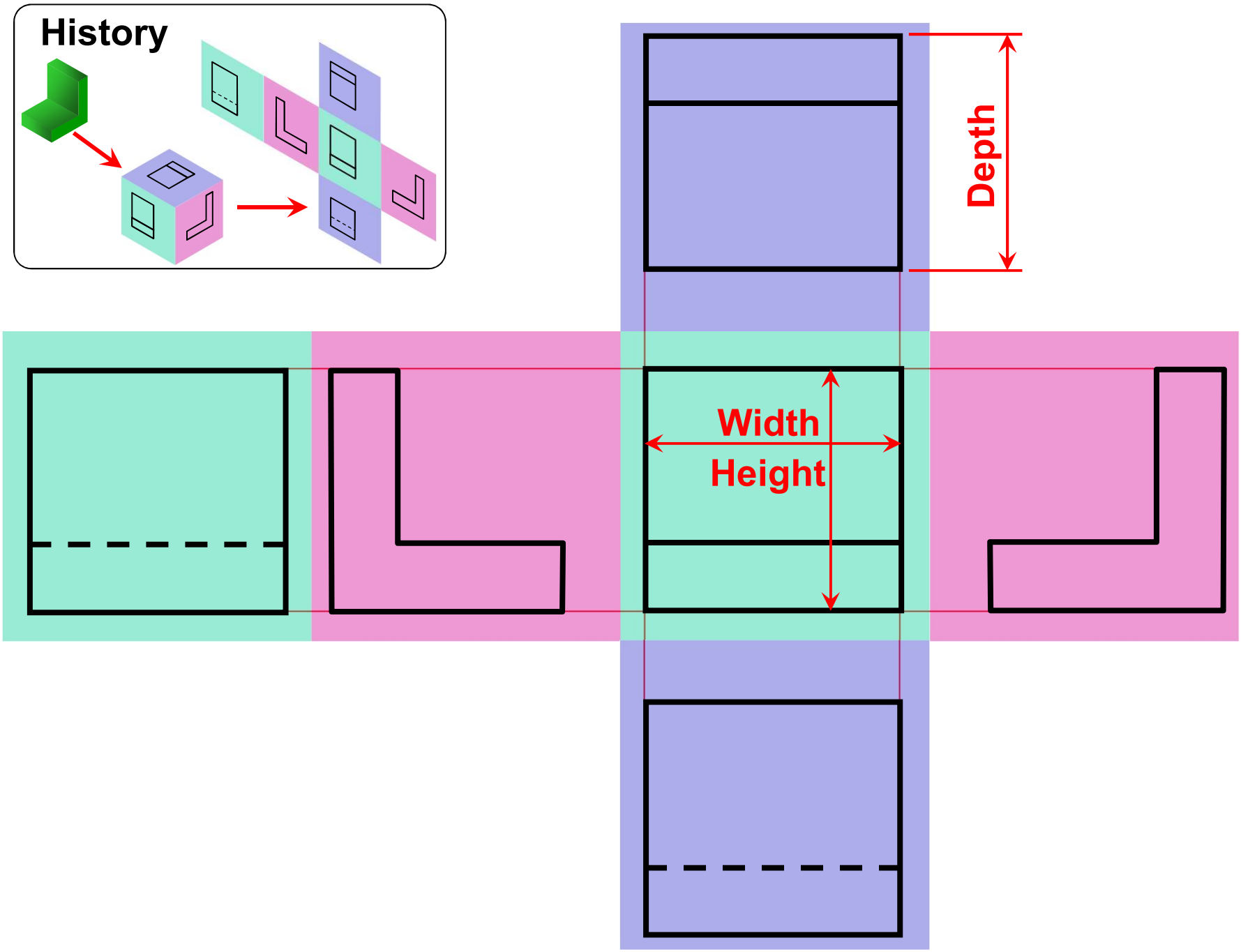
History
Depth
Width
Height

PROJECTION OF OBJECT

The views are obtained by projecting all object features to the picture plane.

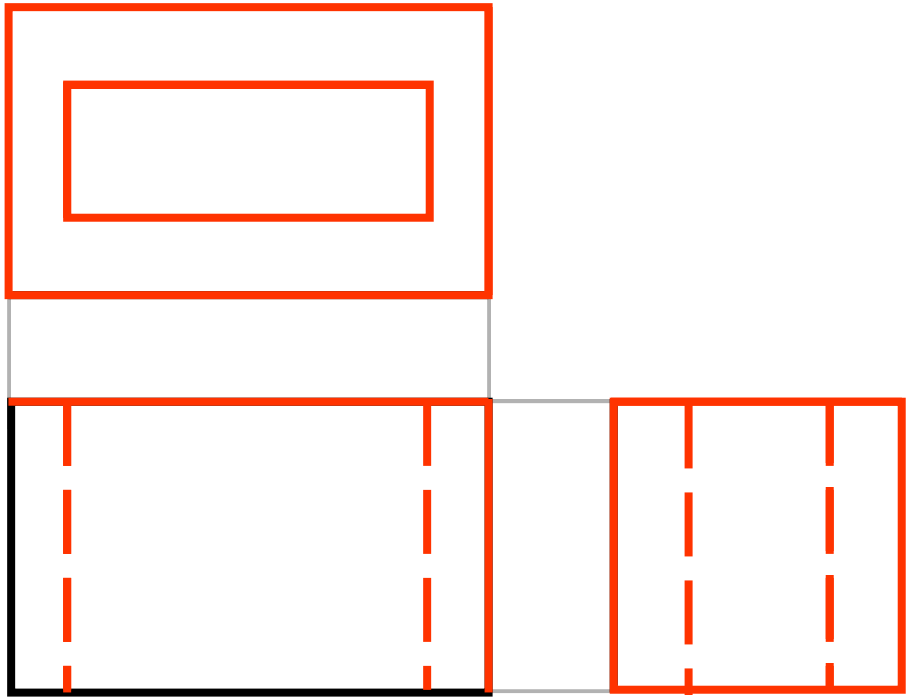

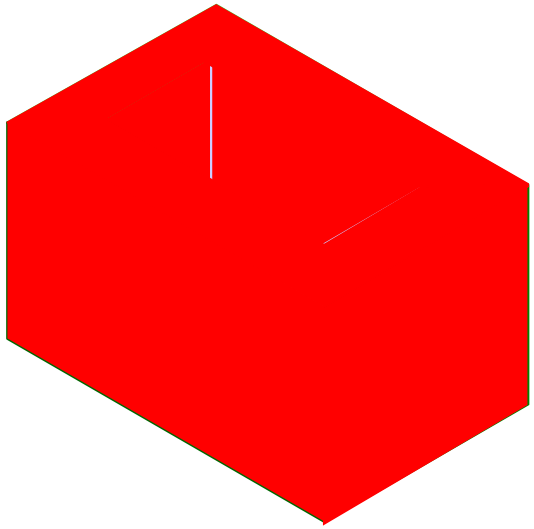

PROJECTION OF OBJECT

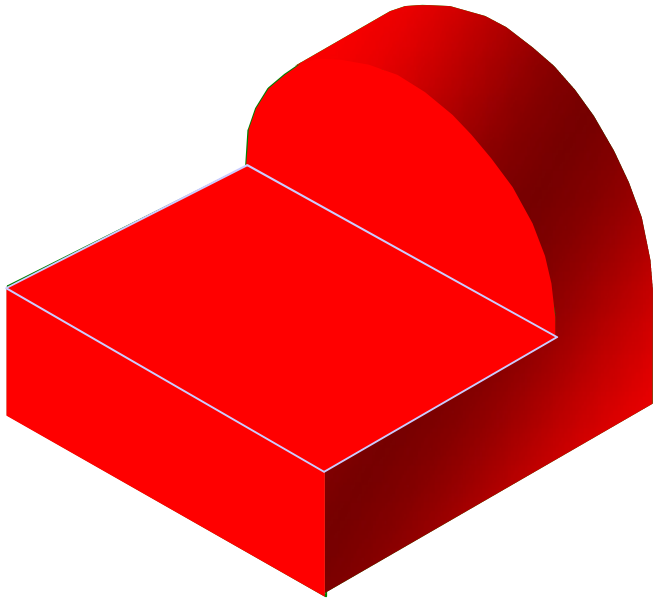

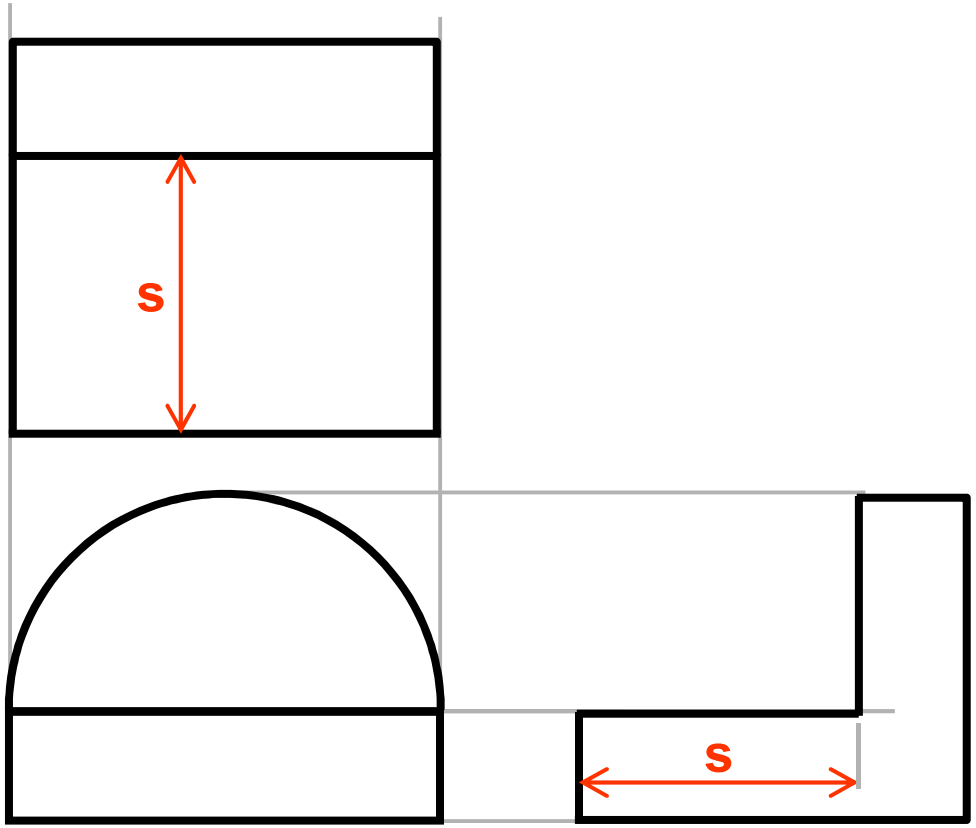

PROJECTION OF OBJECT

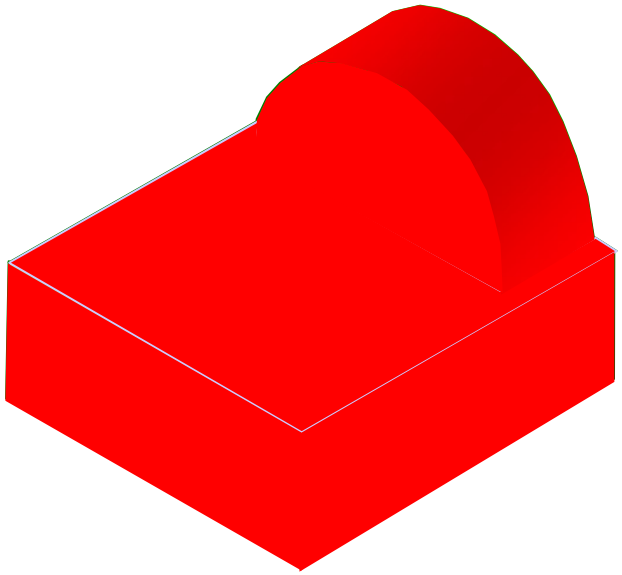

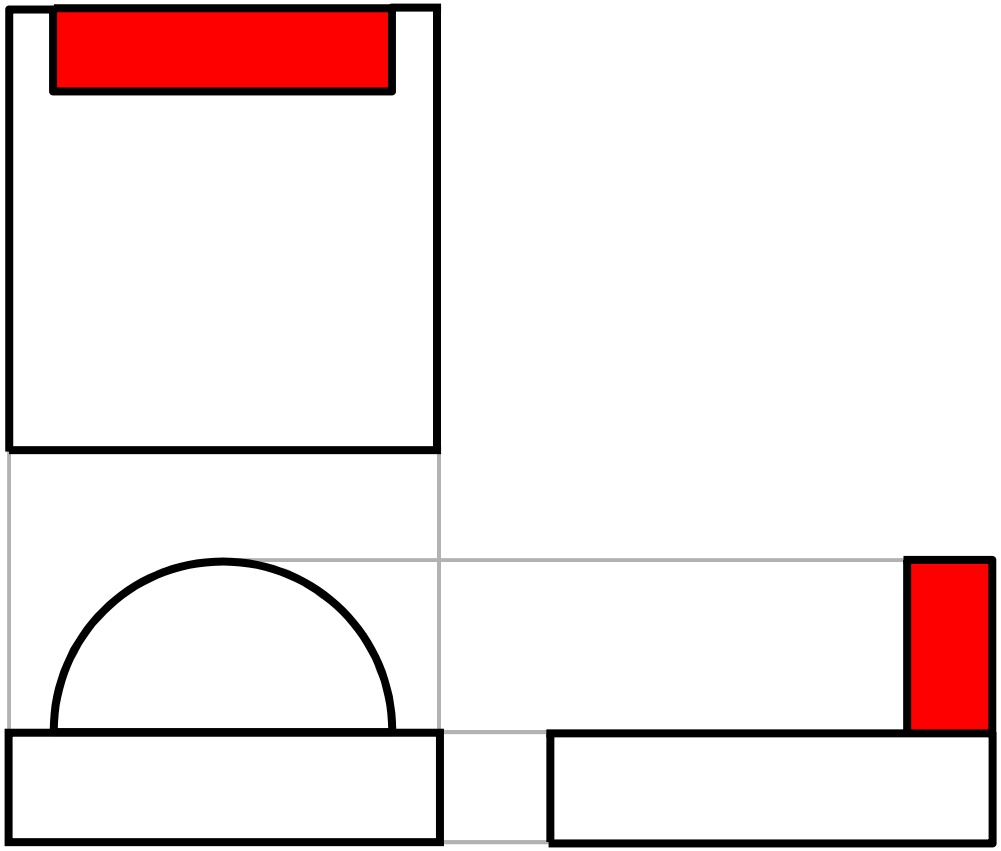

OBJECT FEATURES

Edges are lines that represent the boundary between two faces.

Corners Represent the intersection of two or more edges.

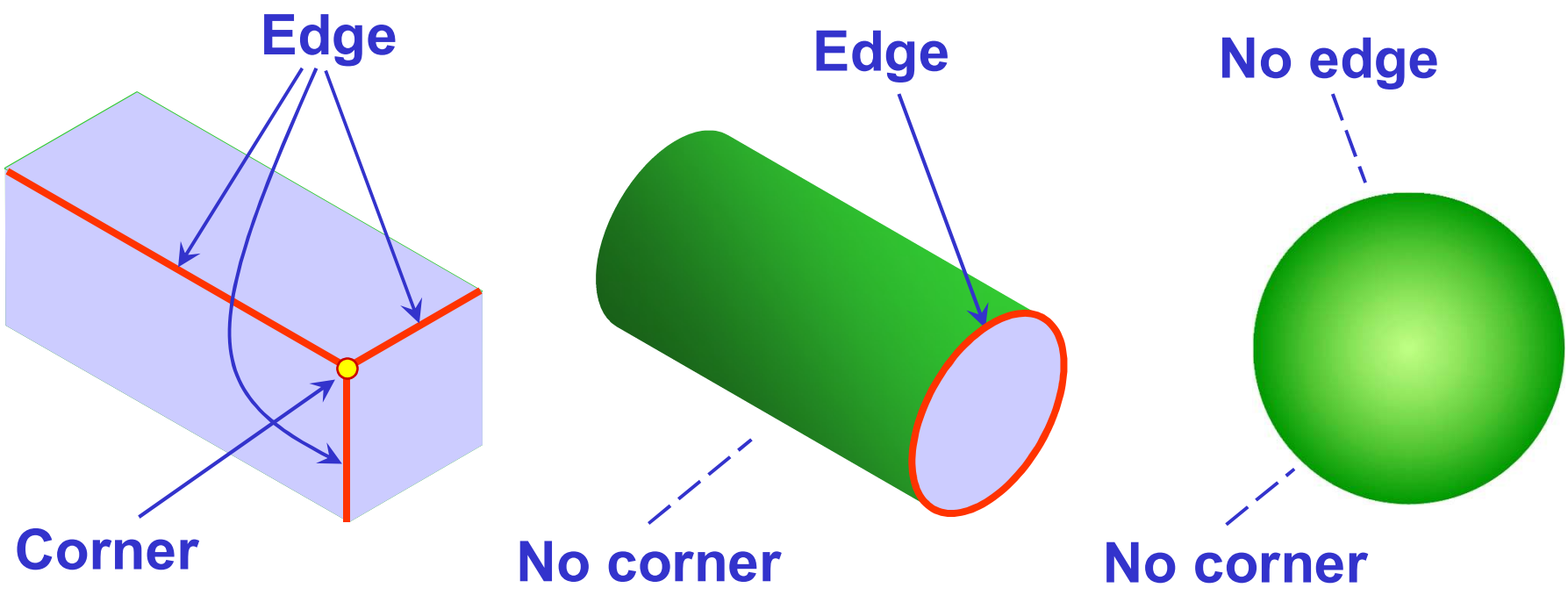

OBJECT FEATURES

Surfaces are areas that are bounded by edges or limiting element.

Limiting element is a line that represents the last visible part of the curve surface.

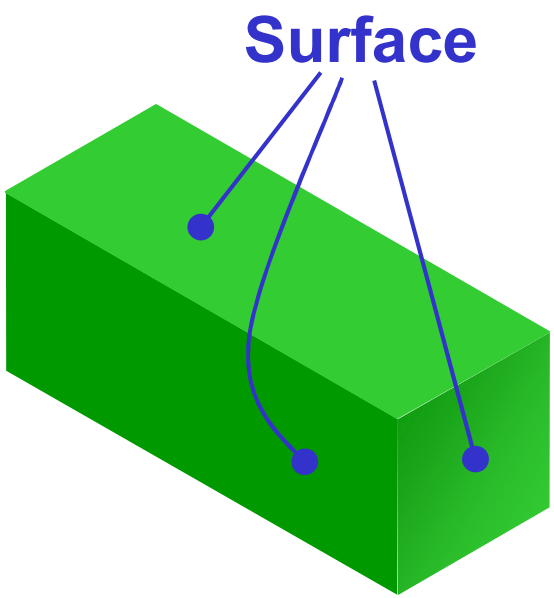

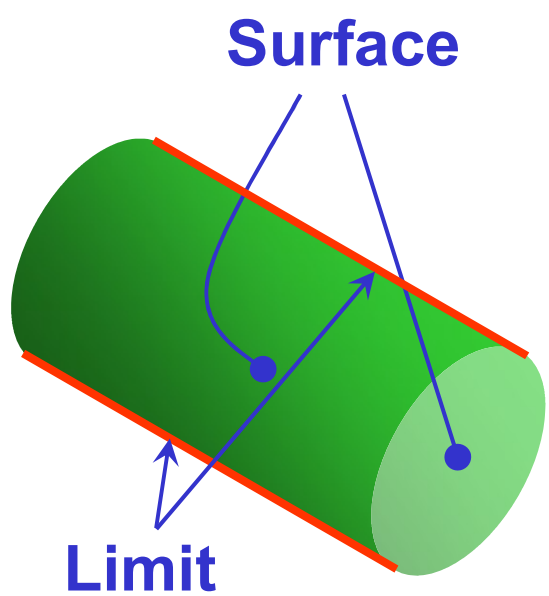

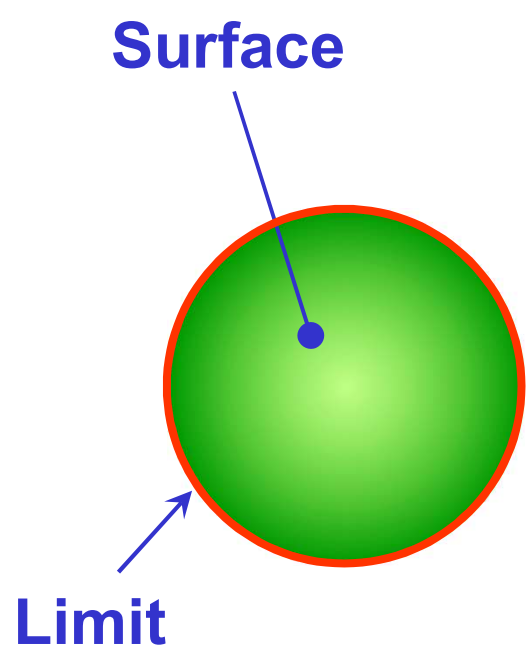

Orthographic Projection

- <u>Orthographic drawings</u> represent three dimensional objects in three separate views arranged in a standard manner.

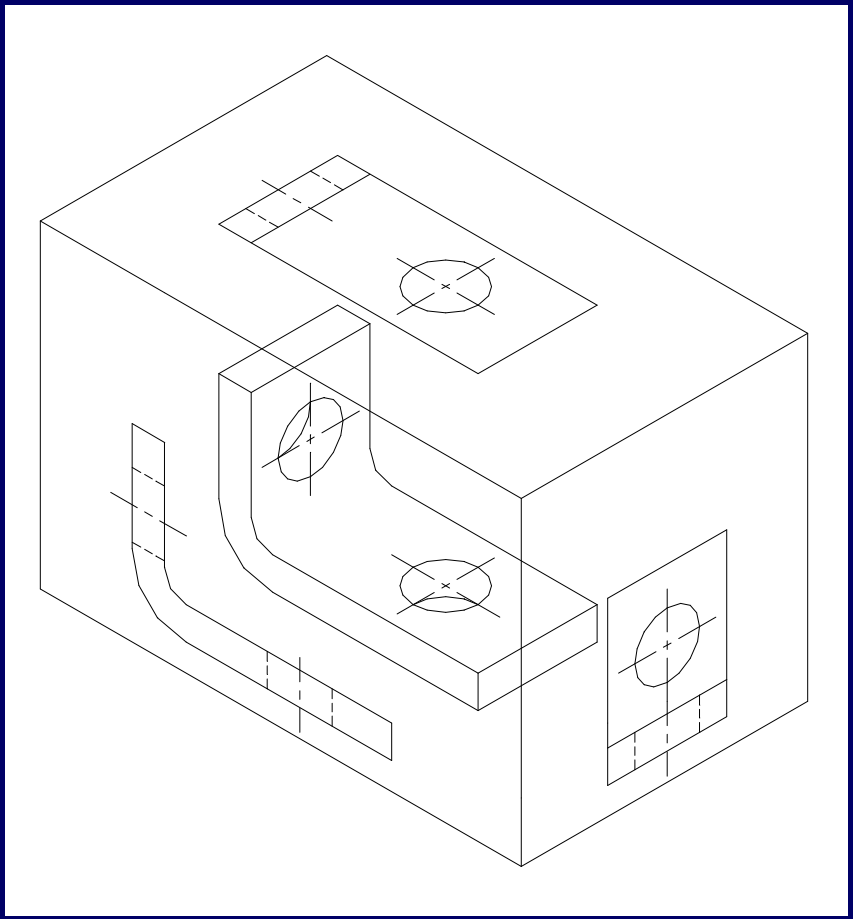

Converting to Orthographic

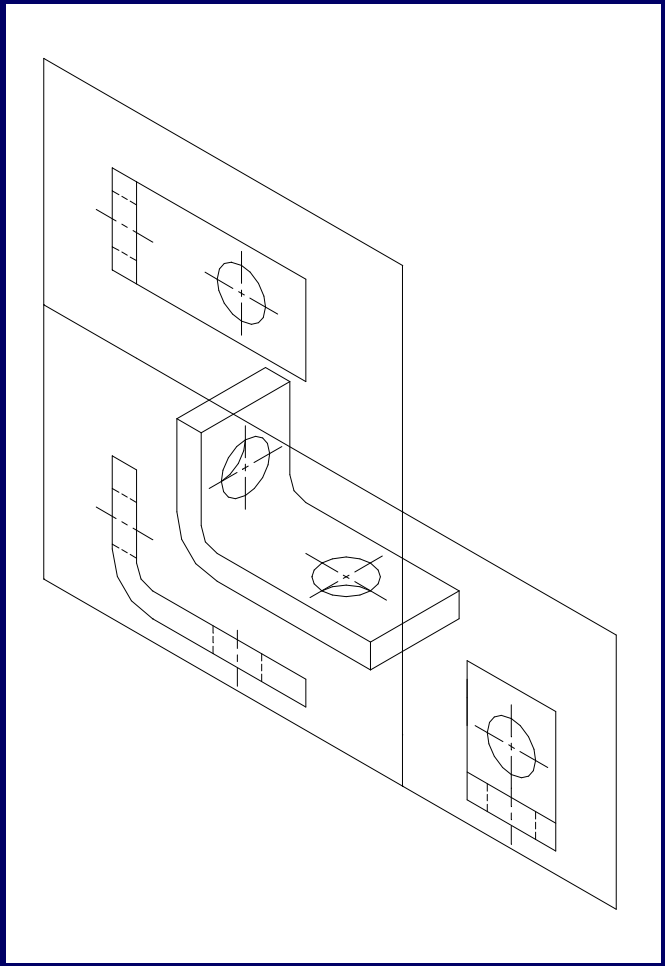

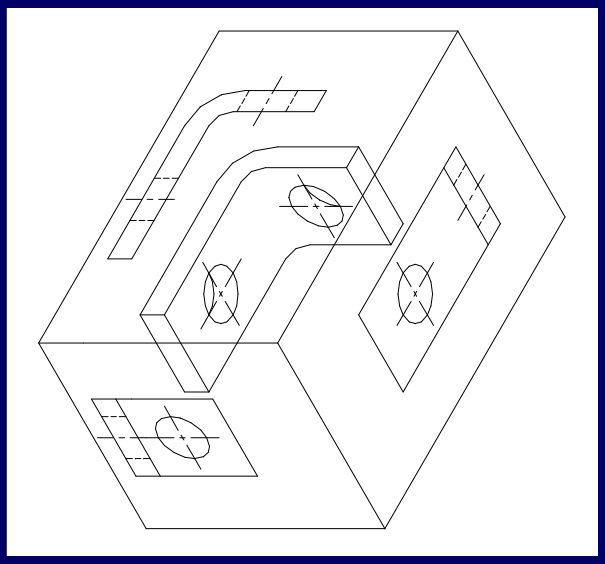

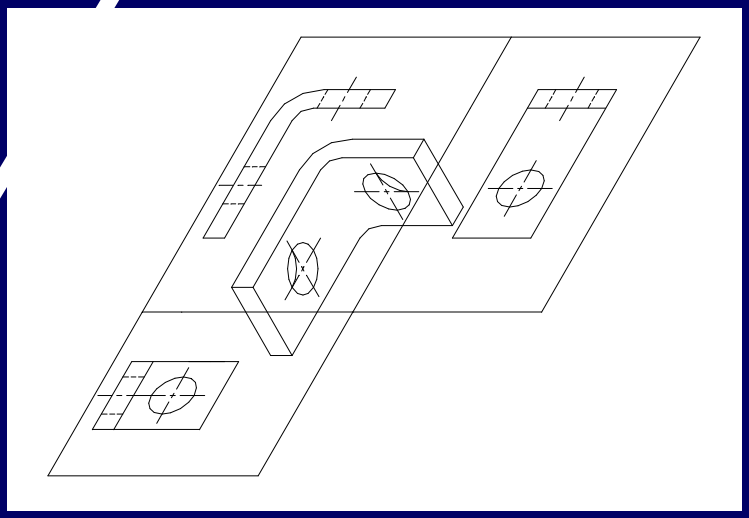

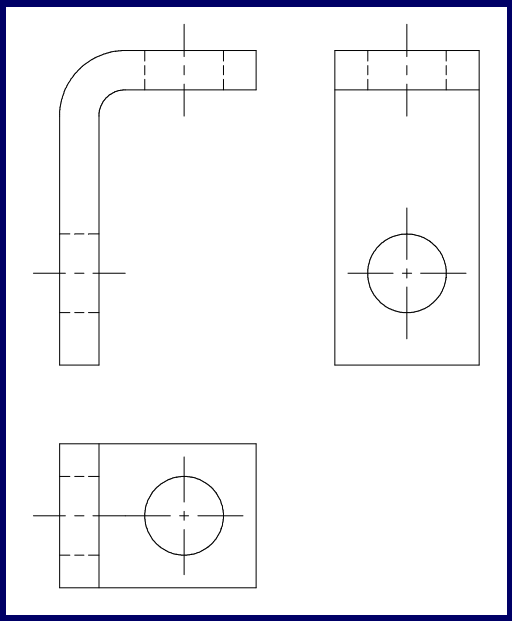

Orthographic Views

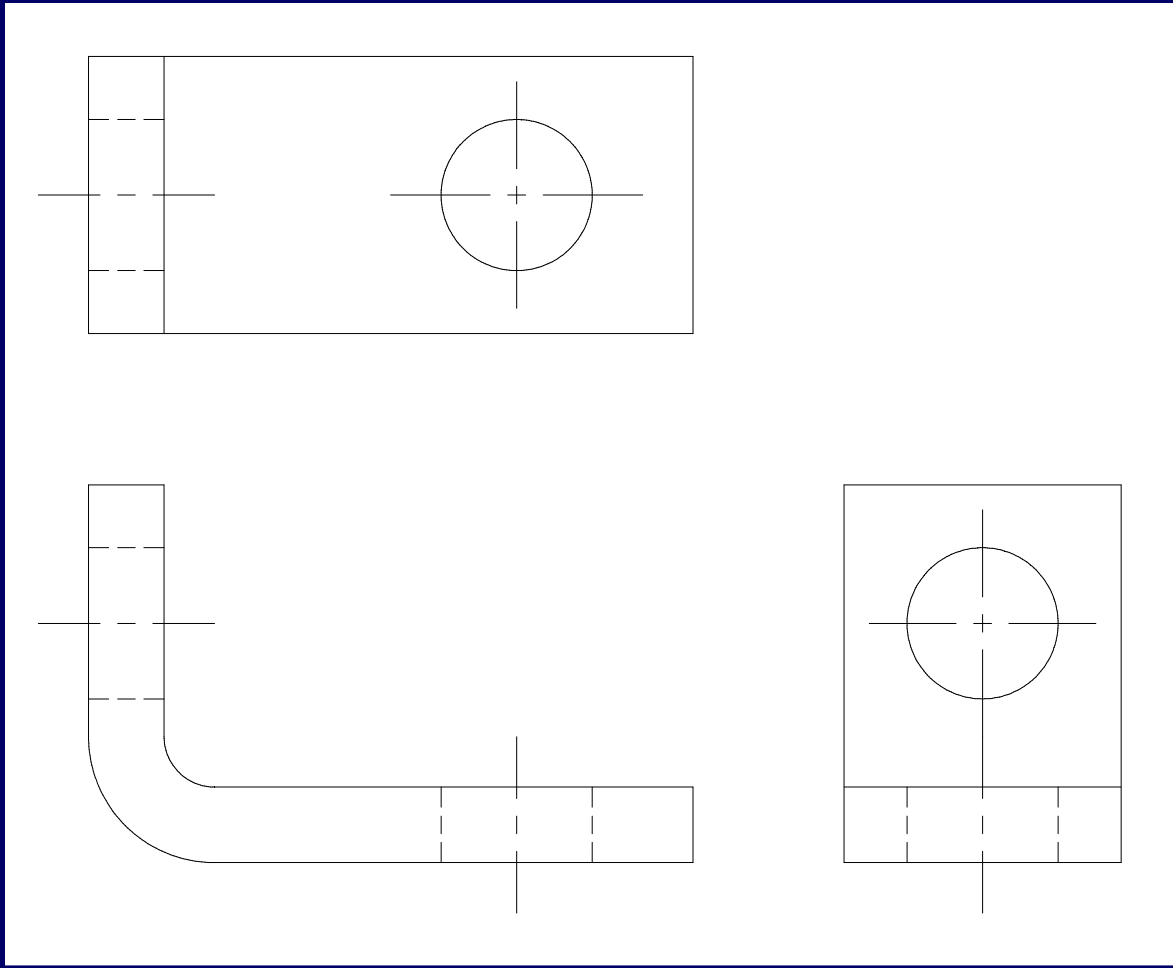

Orthographic Projection

a system of drawing views of an object using perpendicular projectors from the object to a plane of projection

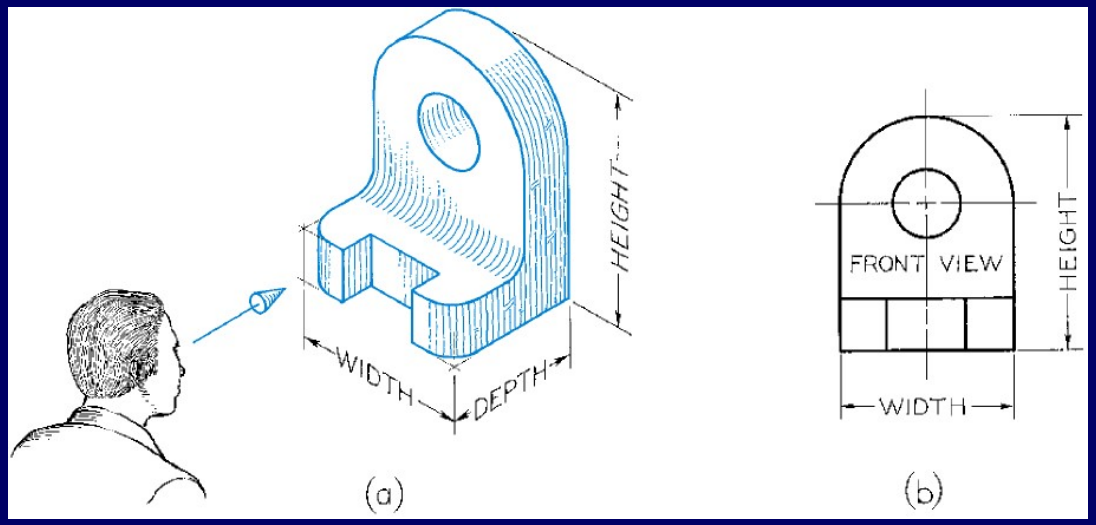

Revolving an Object to Produce the other Views

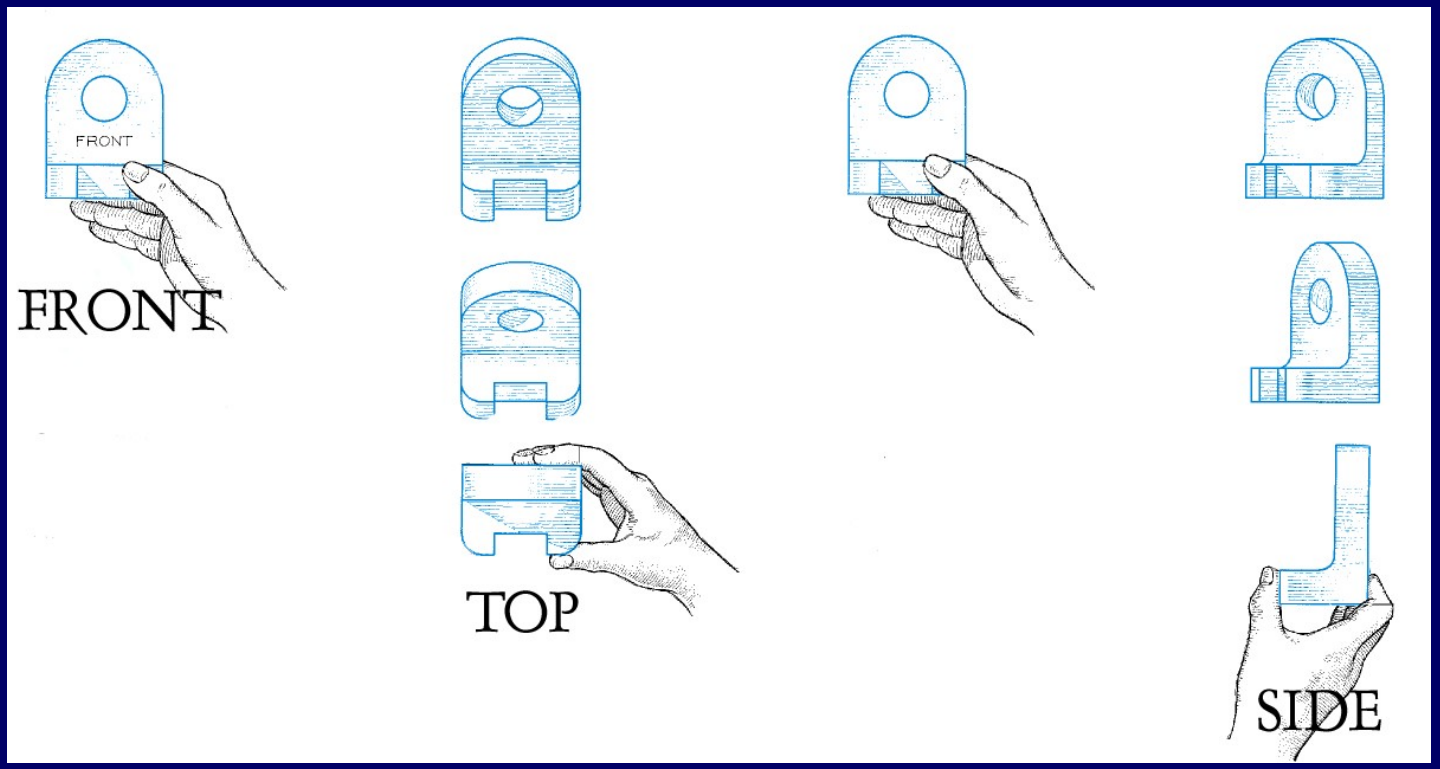

The Six Basic Views

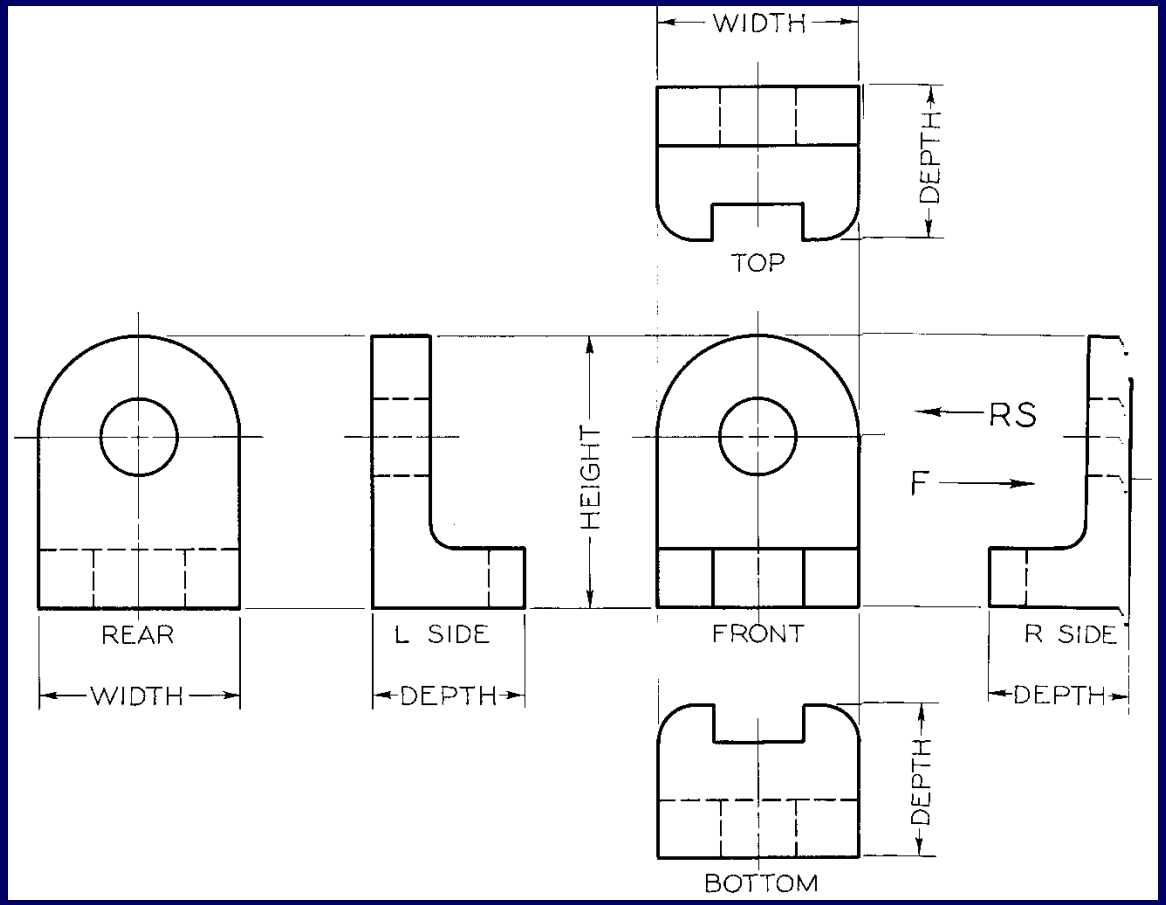

The Standard Arrangement of Views

TOP

LEFT FRONT RIGHT

BOTTOM

REAR

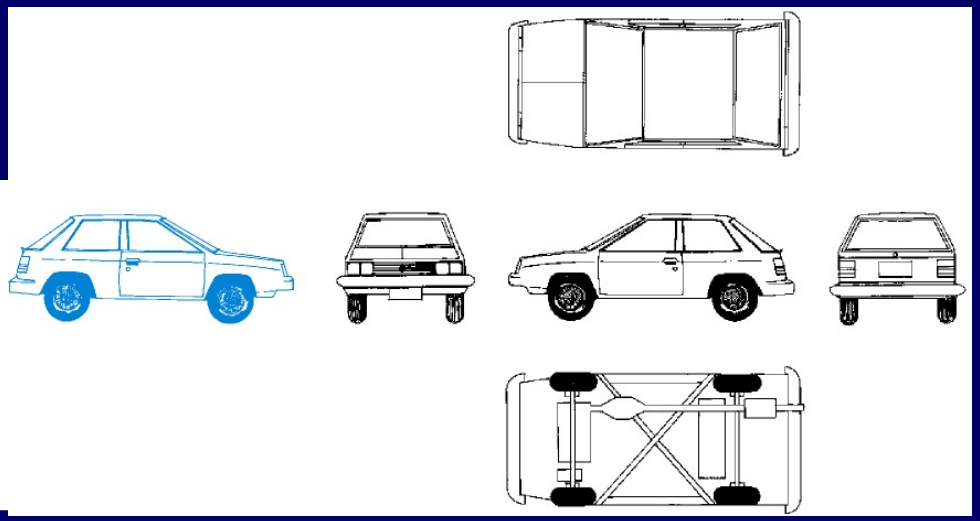

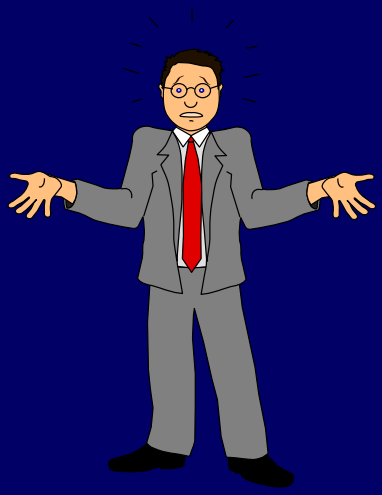

To make it possible for someone to interpret the drawing

THE GLASS-BOX APPROACH

Principal projection planes:
Horizontal
Frontal
Profile

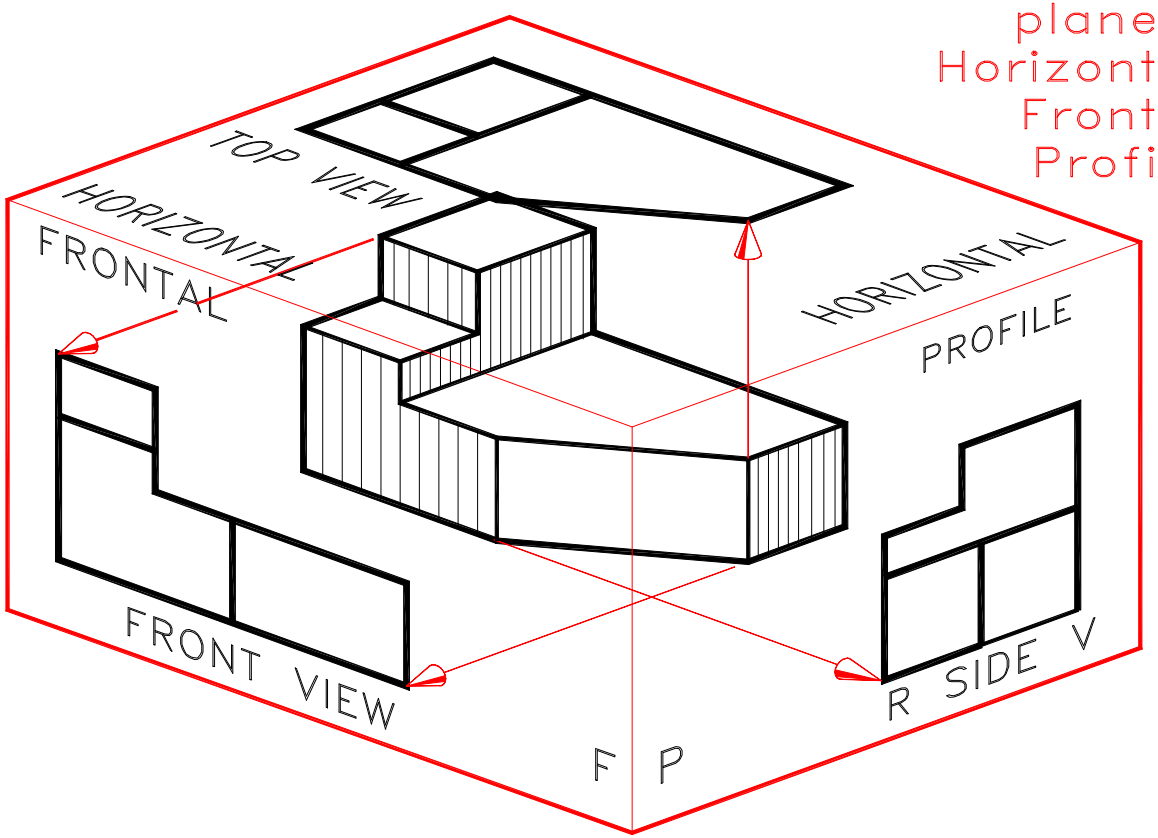

Orthographic Projection

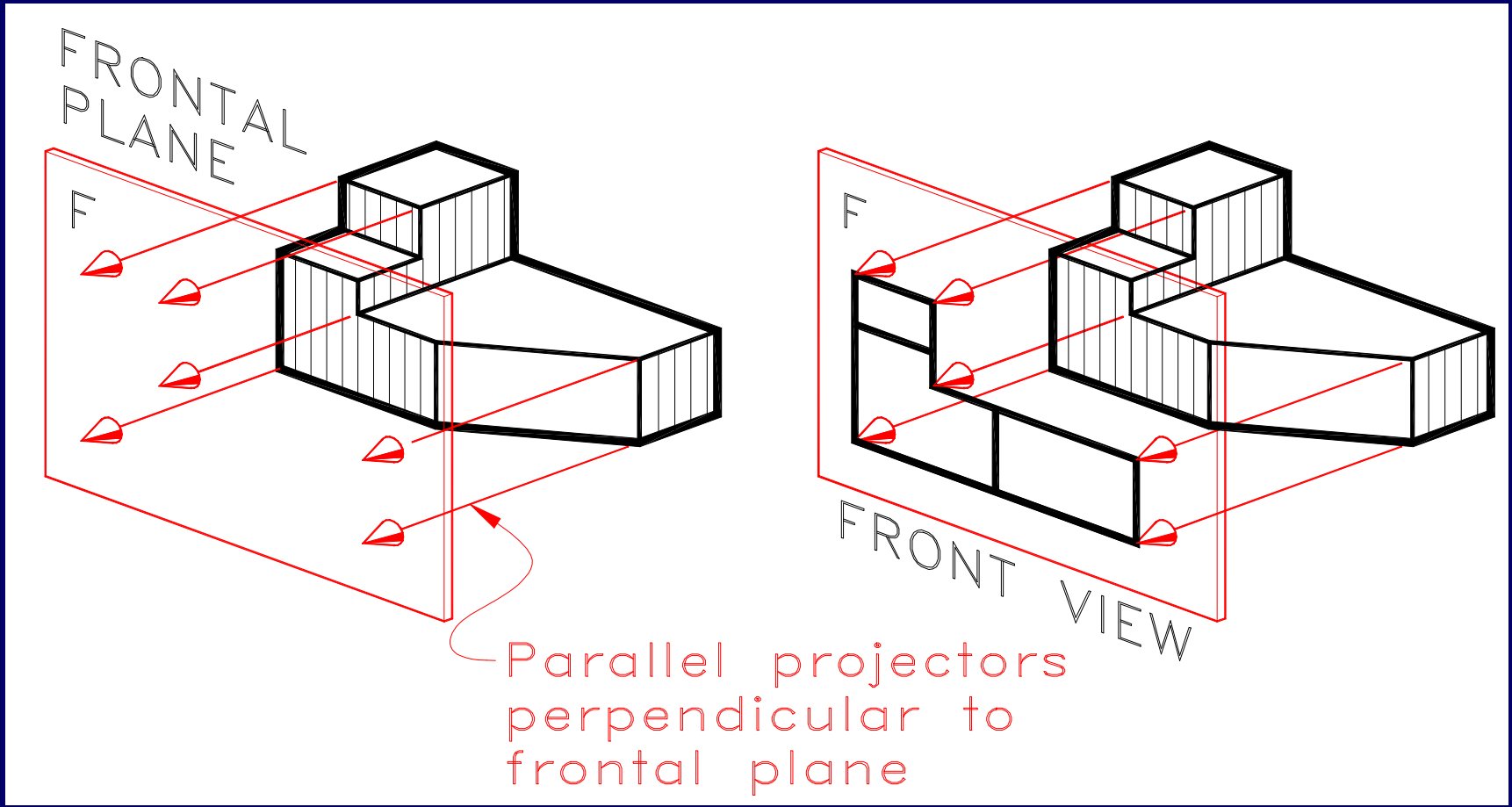

Opening the Box

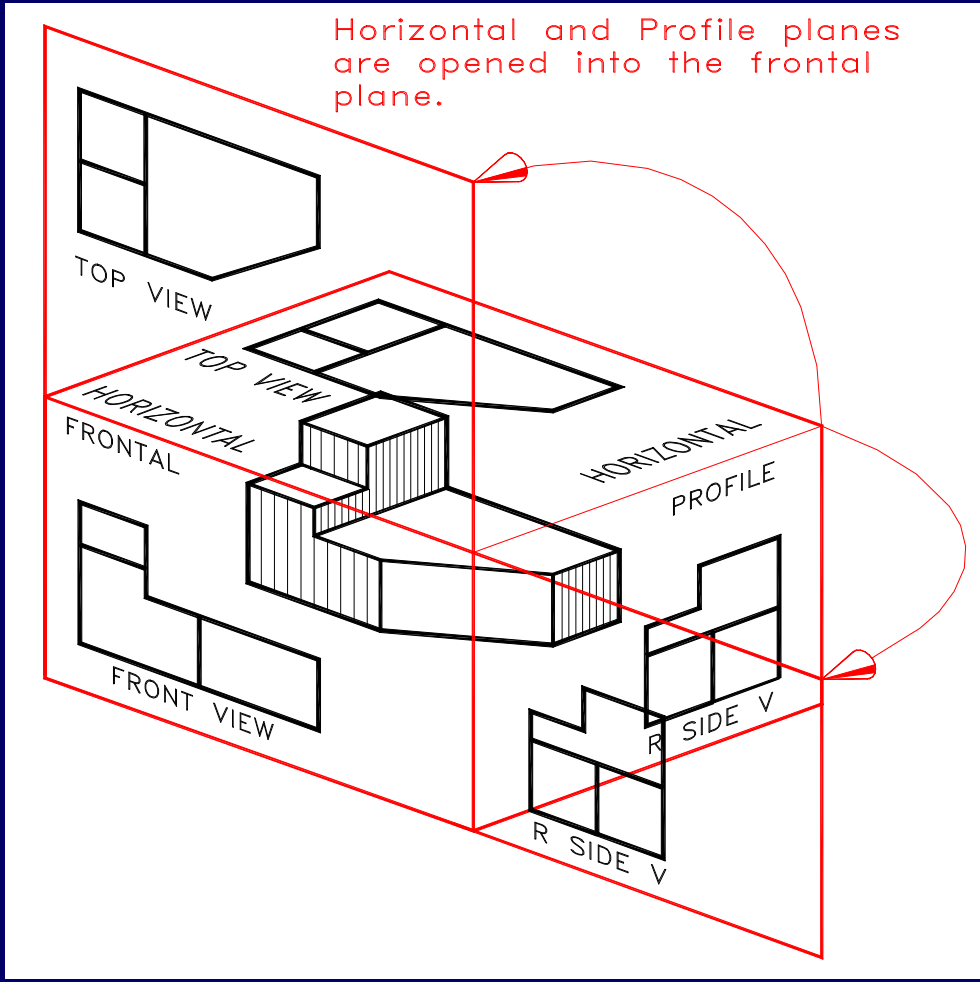

Final views for third angle projection method

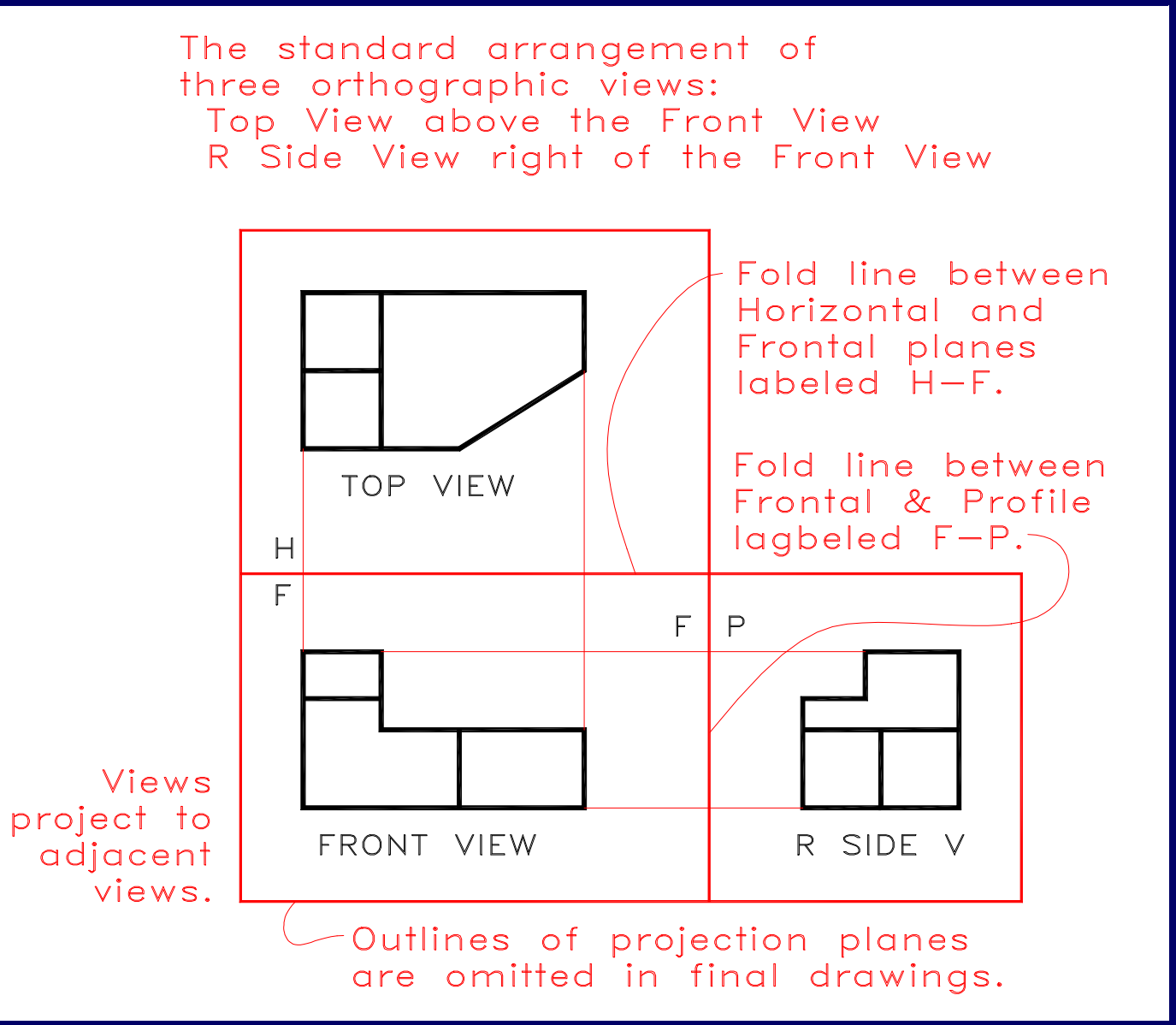

Object for exercise

- Complete three orthographic views of the object.
- Include visible, hidden, and center lines where appropriate.

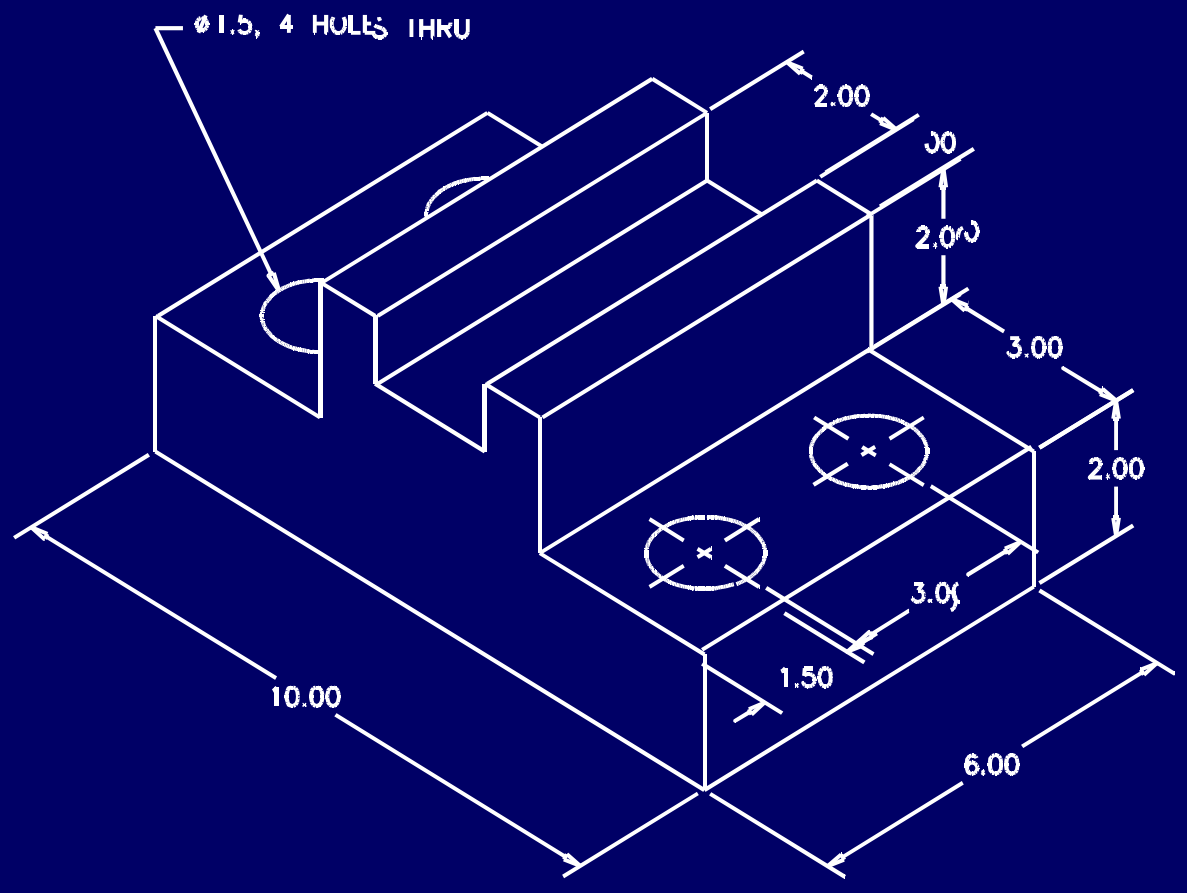

Solution

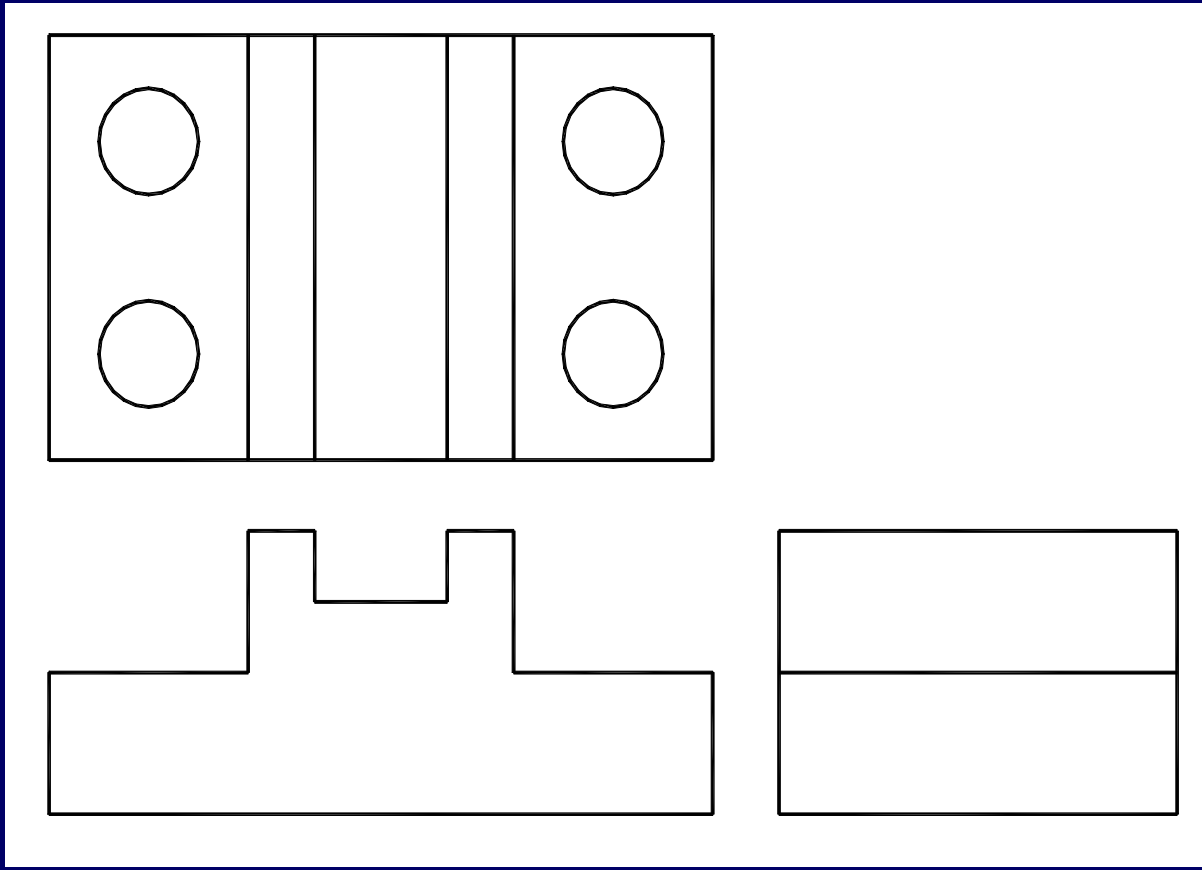

Solution

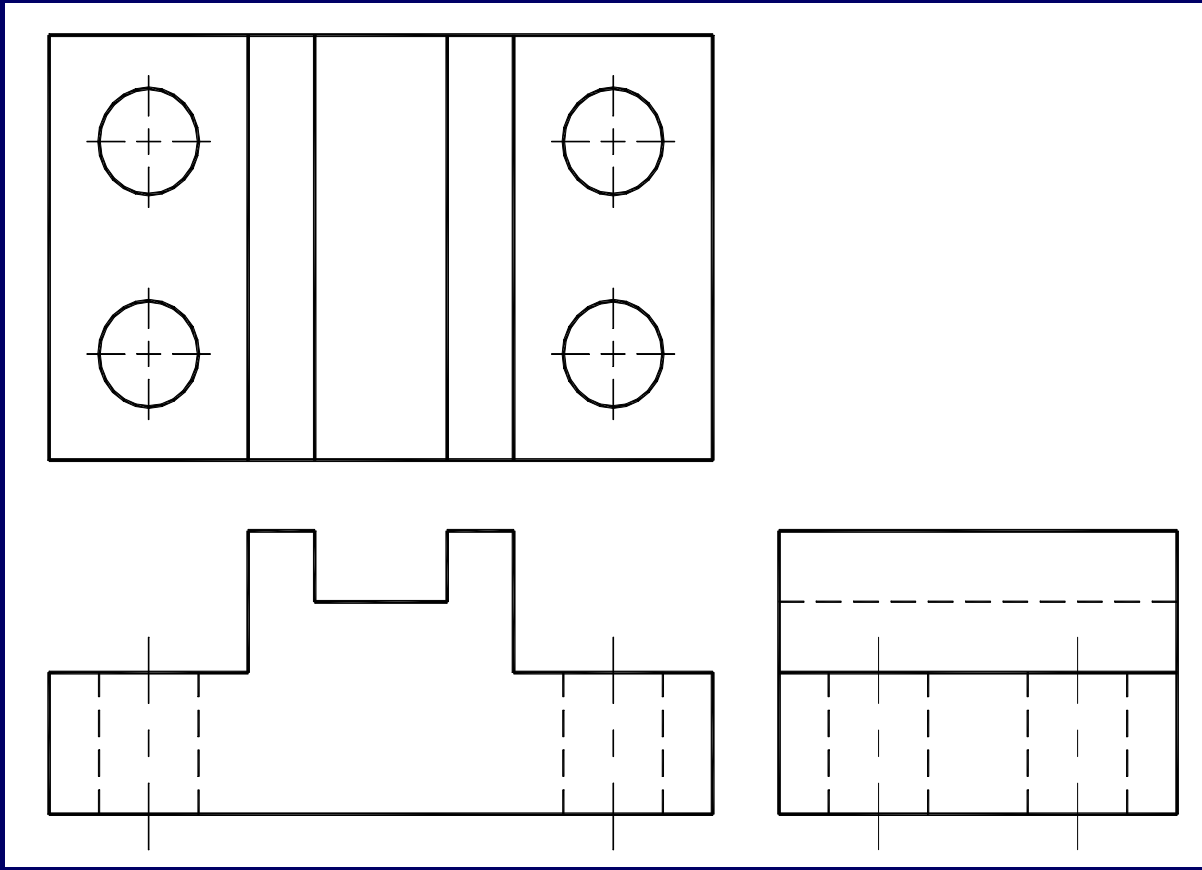

THANK YOU